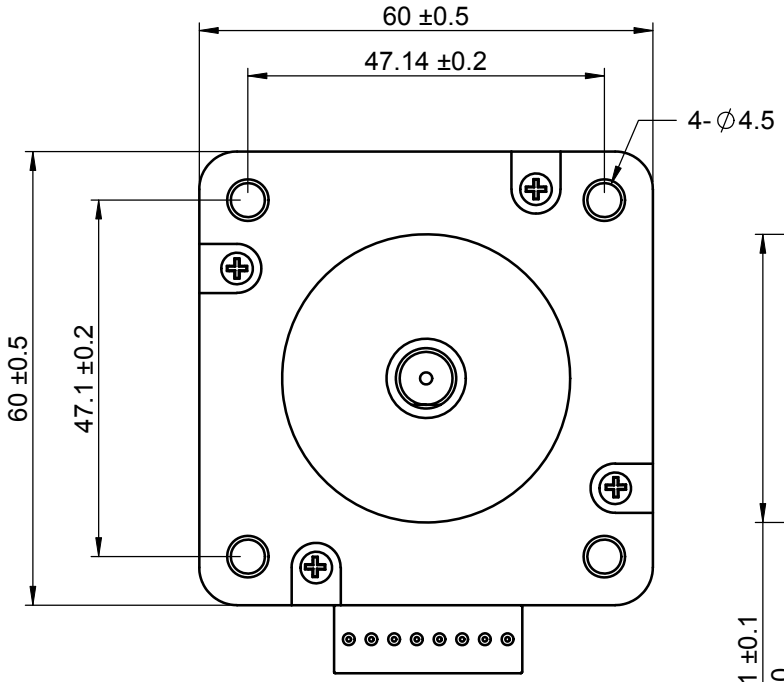

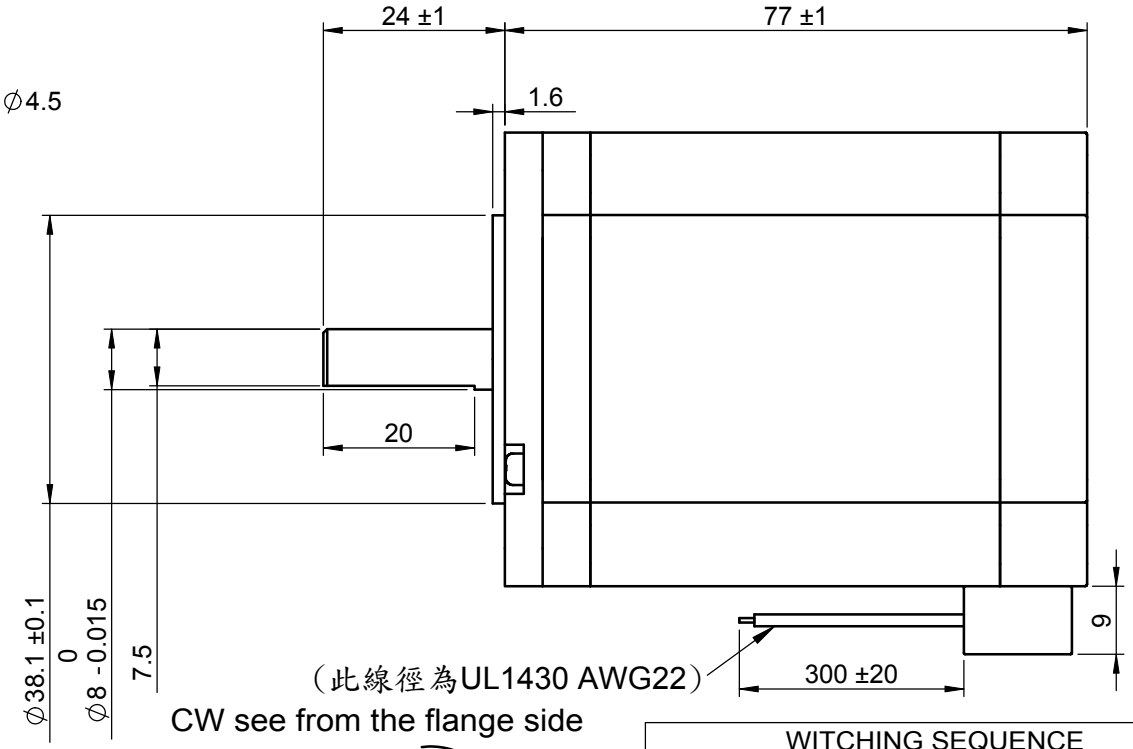

CW see from the flange side

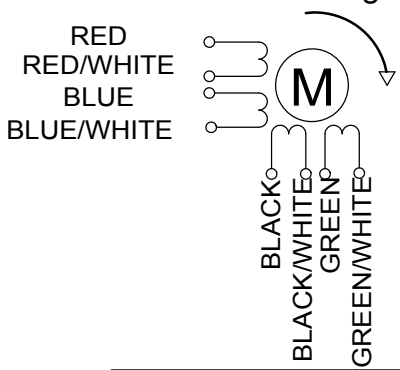

WITCHING SEQUENCE						
PIN LOCATION	COLOR	→ CW				
1	RED	+	-	-	+	+
	BLUE					
2	RED/WHITE	-	+	+	-	-
	BLUE/WHITE					
3	BLACK	+	+	-	-	+
	GREEN					
4	BLACK//WHITE	-	-	+	+	-
	GREEN//WHITE					

註：以雙極性驅動板測試

MODEL		Motor Characteristics					
JH60-H0R1A786		Resistance	Step Angle	Steps Revolution	Max PIT Rate	Max POT Rate	POT(at200pps)
Constant current	30V 3A	3.1Ω	1.8 °	200	400PPS	10000PPS	23.8kg-cm

THIRD ANGLE PROJECTION	製圖	JOANNE	Cheshire Electric Company,LLC	
ALL DIMENSION ARE IN MM (UNLESS OTHERWISE SPECIFIED)	設計		Part No JH60-H0R1A786	
	審核	Adam		
	材料		Name HB stepper motor	REV. NO. A
繪製比例： 1:1	完成時間	2012/3/14		